TOILETS

WC RP, back-to-wall, floor-standing

DE: WC RP, back-to-Wall, bodenstehend
FR: WC sur pied RP, à alimentation séparée
IT: Vaso RP, Back-to-Wall, a pavimento
NL: Toilet RP, back-to-wall, staand

PRODUCT DETAILS	
Product code	CW563Y#XW
GTIN (EAN)	40 50663 09682 3
Size	w:380xd:640xh:410 (mm)
Weight	36 kg
Colour	White
Material	Ceramic
Technology	TORNADO FLUSH, CEFIONTECT, RIMLESS, Water saving, 3/5 L

TO BE COMBINED WITH:	
Connecting set for WASHLET® RW on WC RP, back-to-wall	TCA564
WASHLET® RW, incl. Remote controller (white)	TCF801EAG#NW1
WASHLET® RW, incl. Remote controller (white / silver)	TCF801CG

Weights and measurements shown may be subject to small variations or are indicative.
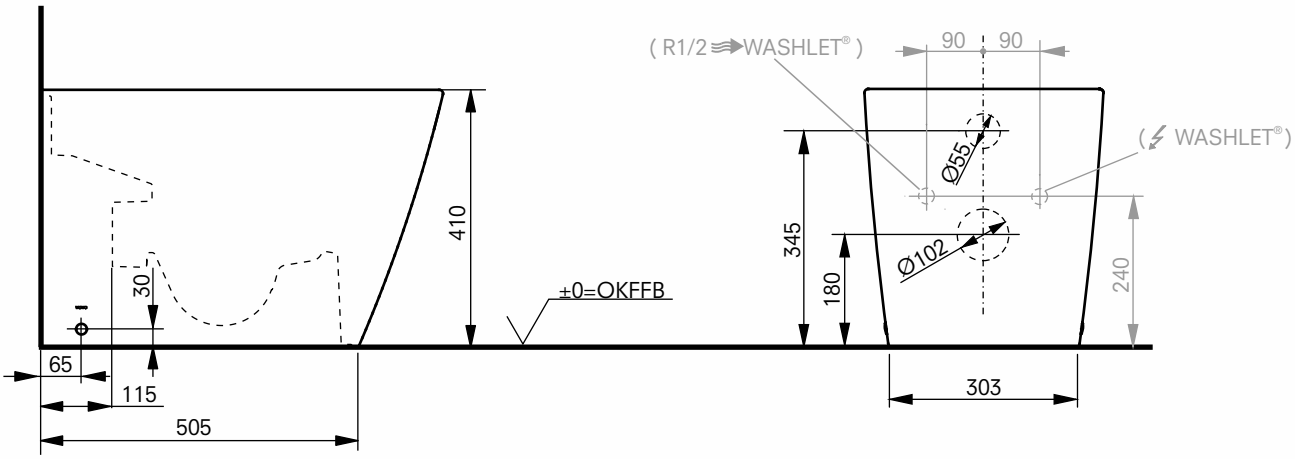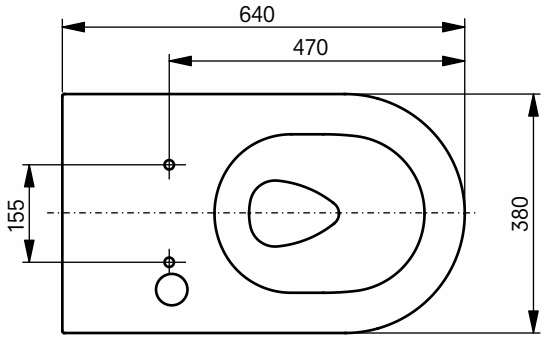
TECHNICAL DRAWINGS